ver.1407

dib

www.lsdaewon.co.kr

LS DAEWON LIVING SOLUTION

Head Office&Factory
94,Robot land-ro 249beon-gil,Seo-gu,
Incheon,Korea(673-21,Gyeongseo-dong)

LS DAEWON LIVING SOLUTION

dib LIFE STYLE DESIGNER

User's Guide

This user's guide contains the product warranty certificate.
Be sure to read this user's guide carefully before use.

120V 60Hz

www.lsdaewon.co.kr

DIB-1500R

díb...

THIS UNIT WAS MANUFACTURED FOR HOUSEHOLD USE ONLY.
READ ALL OPERATING INSTRUCTIONS BEFORE INSTALLATION.

Notes

1. This product should be installed according to this manual.
2. Please read this manual carefully and install properly.
3. Please save this manual and place an easily accesible location.
4. Do not attempt to service this appliance yourself. Doing so could void warranty.

CONTENTS

1. Safety Instruction 4
2. Product Characteristic 8
3. Designation of Each Component 9

4. Installation 11
5. Trial Operation 15
6. Disassembly of Product 16

7. How to Use the Product 18
8. User Setting Facilities 22

9. Maintenance & Cleaning 24
10. Before requesting repair 26
11. Product Specifications 27
12. Comparison Chart 28
13. Memo 29
14. Warranty Information 31

01.Safety Instruction

IMPORTANT SAFEGUARD

When using electrical products, especially when children are present, basic safety precautions should always be followed,

READ ALL INSTRUCTIONS BEFORE USING

- In the case 120V 60Hz : Power supply must be a 15 Amp GFCI outlet.
- The electrical cord must be connected to a GFCI outlet.
- The GFCL outlet should be 1ft. above the floor.
- Install only in well-ventilated areas to avoid excess humidity.
- Do not install in narrow toilet stalls or in shower stalls.
- Install inly where direct contact with water is minimized.
- Do not install near any heat source
- Avoid using extension cords If possible. Consult with a certified electrician where extension cords are necessary.

DANGER – To reduce the risk of electrocution:

- Do not use while bathing.
- Do not place or store product where it can fall or be pulled into a tub or sink.
- Do not place in or drop into water or other liquid.
- Do not reach for a product that has fallen into water. Unplug immediately.

WARNING – To reduce the risk of burns, electrocution, fire or injury to persons:

- Close supervision is necessary when this product is used by, on, or near children or invalids.
- Use this product inly for its intended use as described in this manual. Do not use attachments not recommended by the manufacturer.
- Never operate this product if it has a damaged cord or plug, if it is not working properly, it has been dropped or damaged, or dapped into water. Return the product to a service center for examination and repair.
- Keep the cord away from heated surfaces.
- Never use while sleeping or drowsy.
- Never drop or insert any object into any opening or hose.
- Do not use outdoors or operate where aerosol (spray) products are being used or where oxygen is being administered.
- Connect this product to a properly grounded outlet only. See grounding instructions.
- Unplug this product before filling. Fill (reservoir) with water only unless otherwise specified by manufacturer. Do not overfill (or specify filling instructions).

SAVE THESE INSTRUCTIONS

GROUNDING INSTRUCTION

DANGER - Improper use of the grounding plug can result in a risk of electric shock.

This product has a three-prong grounding plug, which must be plugged into an outlet that is properly installed and grounded. In the event of an electrical short circuit, grounding reduces the risk of electric shock by providing an escape wire for the electric current. If repair or replacement of the cord or plug is necessary do not connect the grounding wire to either flat blade terminal. The wire with insulation having an outer surface that is green with or without yellow stripes is the grounding wire. Check with a qualified electrician or service person if the grounding instructions are not completely understood, or if in doubt as to whether the product is properly grounded.

This product is for use on a nominal 120V circuit, and has a grounding plug that looks like the plug illustrated in sketch A in Figure 1. A temporary adapter, which looks like the adapter illustrated in sketches Band C, may be used to connect this plug to a 2-pole receptacle as shown in sketch B if a properly grounded outlet is not available.

The temporary adapter should be used only until a properly grounded outlet (sketch A) can be installed by a qualified electrician. The green colored rigid ear, lug, or the like extending from the adapter must be connected to a permanent ground such as a properly grounded outlet box cover. Whenever the adapter is used, it must be held in place by the screw.

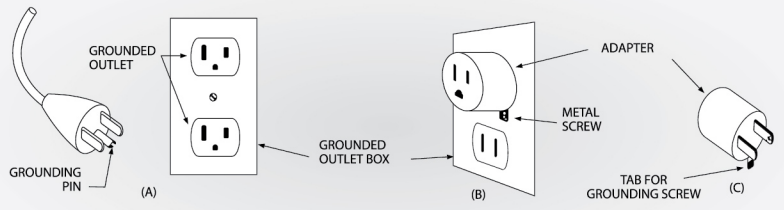

Figure 1.

Optional Grounding Instructions

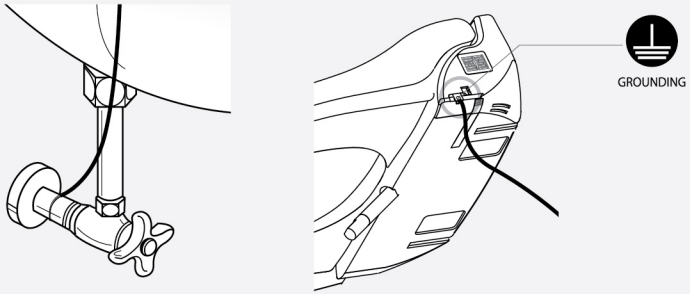

02.Product Characteristic

díb bidet has the following characteristics:

Continuous Warm Water Supply
Enjoy continuous warm water throughout the wash cycle.

Enema Wash
Soft but powerful water wash for added cleansing benefit.

Bubble Wash
Aerated water wash adds cleaning comfort.

Massage
Nozzle moves back and forth for massage effect.

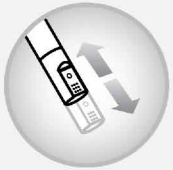

Pulse
Pulsating wash repeatedly cycles from weak to strong.

Deodorization Function
Semi-fundamental deodorizing filter provides odor-free during use.

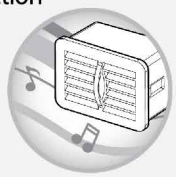

Energy Saving Function
It finds out the time frame when used frequently, realizing the maximum energy saving effect.

Child Settings
Specialized nozzle position and water pressure for children.

Remote Control Unit
Convenient wide LCD remote control provides easy user interface.

User Preset
User can preset and store the memory for control setting

03.Designation of Each Component

Main Body

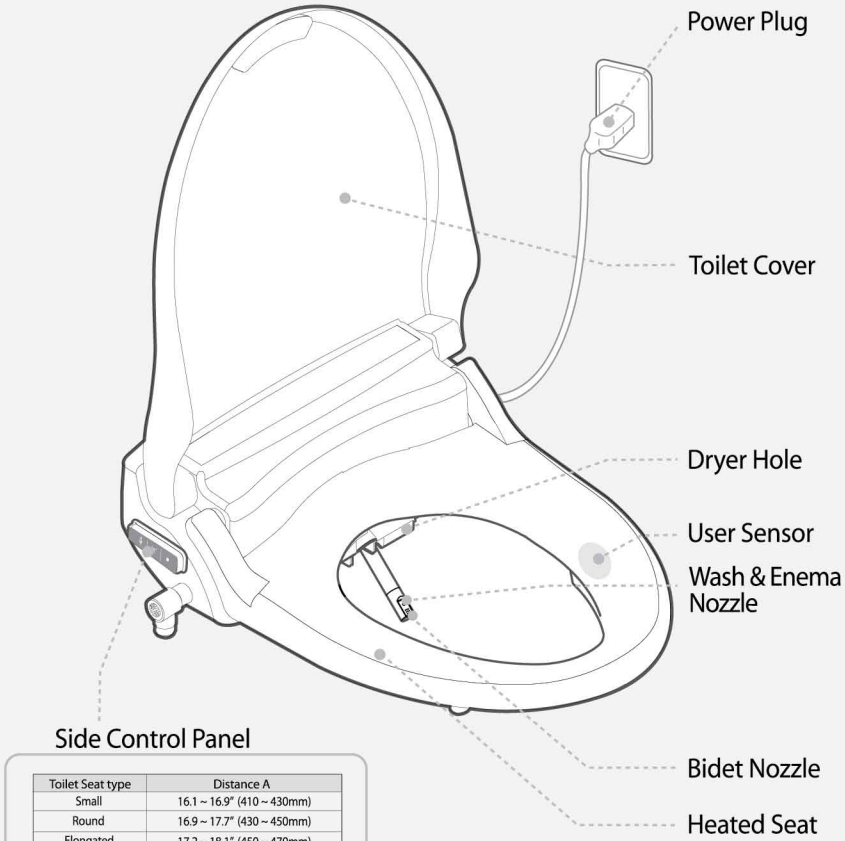

Side Control Panel

Toilet Seat type	Distance A
Small	16.1 ~ 16.9" (410 ~ 430mm)
Round	16.9 ~ 17.7" (430 ~ 450mm)
Elongated	17.2 ~ 18.1" (450 ~ 470mm)

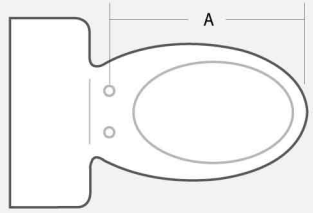

03. Designation of Each Component

Operation Panel

WASH
To run the wash function (2 minutes)

BIDET
To run the bidet function (2 minutes)

ENEMA WASH
To run the Enema wash (2 minutes)

DRY
To run the dry function (3 minutes)

PULSE
To run the Pulse function during Wash/Bidet/ Enema Wash. Water pressure is rhythmically changed from strong to weak.

MASSAGE
To run the Massage (oscillating)during Wash/Bidet. (Not in Enema wash mode) Nozzle moves back and forth automatically. Press it again to stop the function.

NOZZLE CONTROL
To control the nozzle position

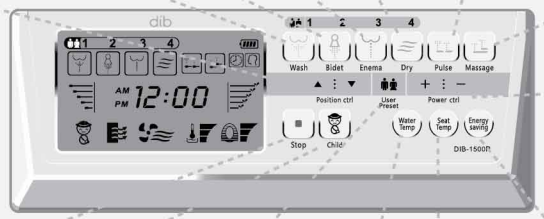

POWER CONTROL
Water pressure and dry temp can be adjusted by pressing HI/LO.

STOP
To stop all functions.

CHILD
children safety mode.

USER PRESET
User can preset and store the memory for control setting

WATER TEMP
To adjust the water temp. by 4 steps (Room temp/ 93°F/96°F/100°F)

SEAT TEMP
To adjust the seat temp. by 4 steps (Room temp/ 93°F/100°F/107°F)

ENERGY SAVING
Automatic mode Learning energy saving mode Releasing energy saving mode

Accessories

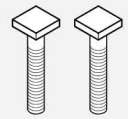
Bolts

Nuts Washers Cone packings

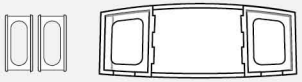
Bracket holders Bracket

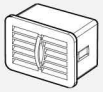
Deodorizing catridge

T-valve

Remote control

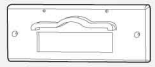
Remote control holder

AA size batteries (2pcs)

Water feed hose (for toilet)

Water feed hose(for bidet)

Spare nut 3/8"

Washer

※Optional

Filter

※Optional

04. Installation

Order of Installation

1 Remove the seat from the existing toilet body.

- Release the nuts, and then remove the seat and cover from it.
- Keep the removed seat, cover and nuts well in a proper place.

2 Close the water feed valve by turning it clockwise, and then drain the toilet water tank out.

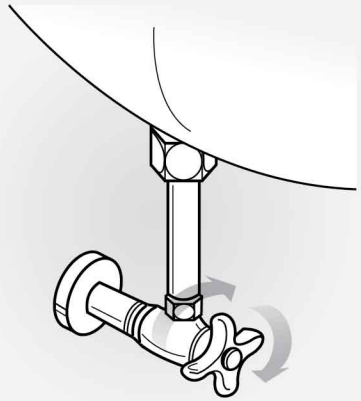

3 Remove the water feed pipe and then install T-valve.

- Keep the removed water feed pipe well in a proper place. It may be useful when moving house to other place later.

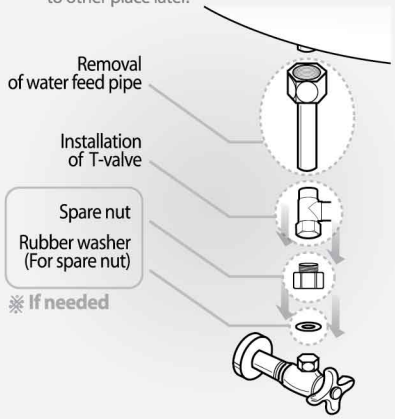

4 Connect the toilet-use hose.

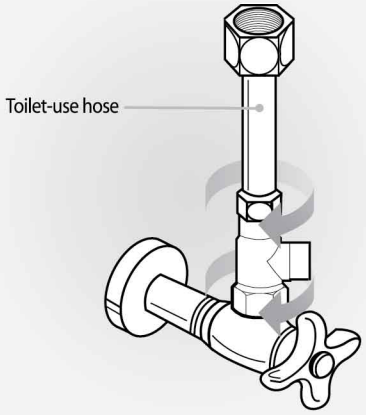

5 Fix the bracket onto the toilet first.

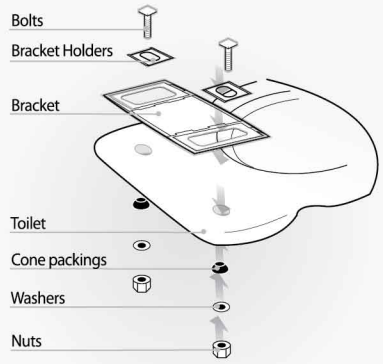

▶ Adjust the seat and the front part of toilet back and forth so that they can corresponds with before fastening the nuts.

6 Push the main body toward the bracket completely.

▶ Push it in until it sounds 'click'.

▶ When the product is not installed well, it may cause leakage.

7 After install the filter onto the T-valve, connect the bidet-use hose to the bidet body.

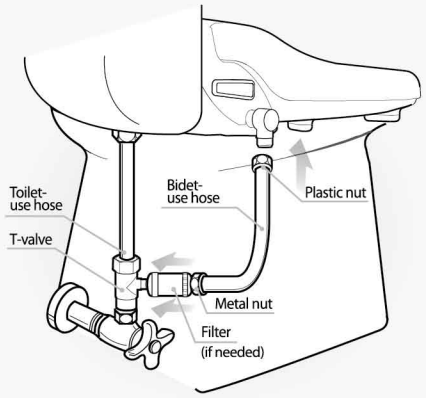

8 Insert the deodorizing cartridge into the bidet body.

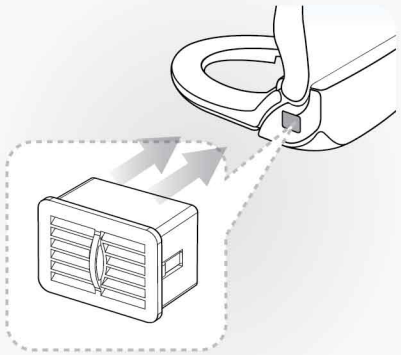

Remote control installation & batteries insertion

1 Remove the adhesive protection to attach the remote control bracket.

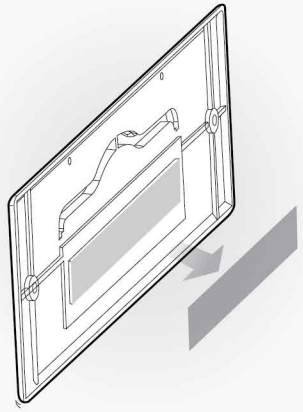

2 Clean the place thoroughly to attach the bracket.

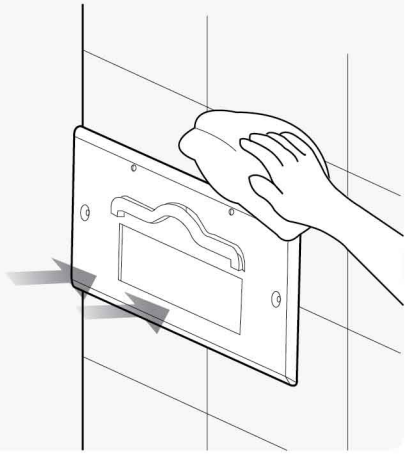

3 Remove the back cover and place supplied batteries with correct direction. Close the back cover.

※ **Caution**
Failure to install the batteries properly could cause damage or faillure of the remote control unit.

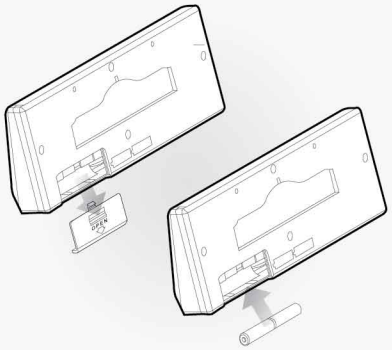

4 Place the remote control in the bracket with correct direction.
When placing it, take care to hang it on the bracket completely. Failure of placing could cause the remote control falling down.

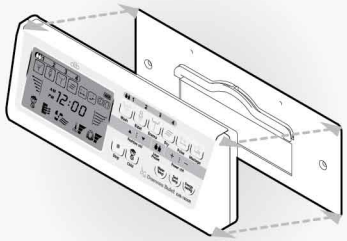

5 When the batteries have reached the end of service life, the battery lamp will blink. Replace the batteries with new ones, AA size X 2pcs.

※ **Caution**
Do not use old and new batteries together.
This could cause damage or failure of the remote control.

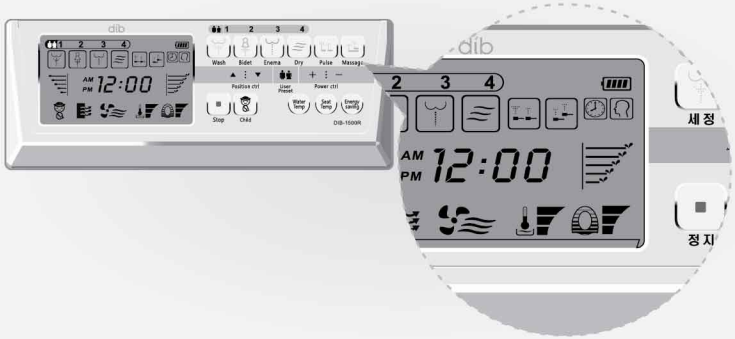

6 If the unit does not work after replacing the batteries, unplug and wait for 3 seconds. Plug in again, and the unit will be ready for use.

※ After replacing the batteries, ID of the unit will be initialized as "00" (factory initialization ID), and its ID will be equalized ID of the remote control that reaches the unit first.
This ID assigning function will be needed to prevent signal interruption if more than 2 units are used at one place. In case of using one unit only, user can use the unit accordingly without setting.

※ If you want to change the ID, please refer to the page 22. for "Remote Control ID Setting"

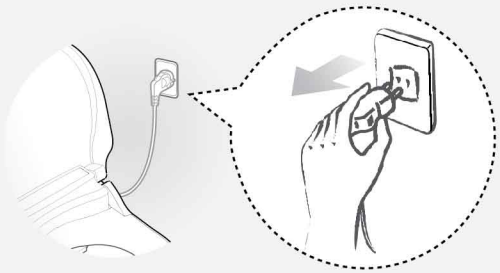

Order of Trial Operation

1 Open the water feed valve by turning it anti-clockwise.

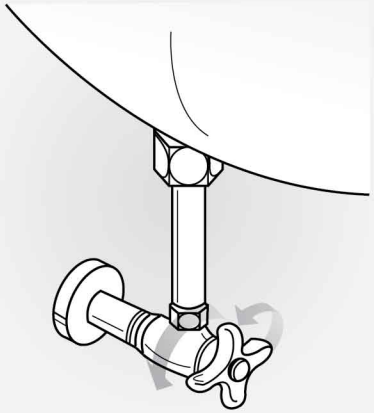

2 Be sure of no leakage around the hose connection.

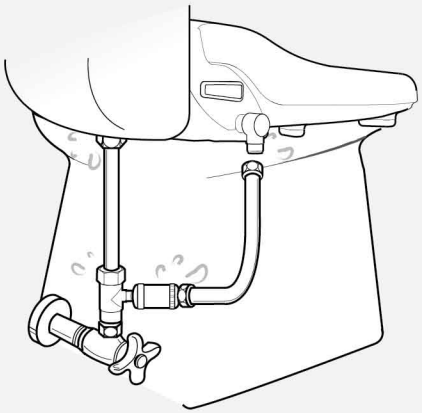

3 Be sure that logo light on the top tunrs on and nozzle comes and restracts when powered on.

▶ Don't plug the power cord with wet hands.
Risk of electric shock.

4 Put the hand on the user sensor part of the seat, check if lights of water pressure gradually turns on, and water comes out from drain hole for 1~2 seconds.

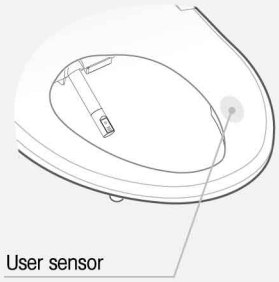

06. Disassembly of Product

Order of Disassembly

1 Remove the power plug from the outlet.

2 Close the water feed valve by turning it clockwise, completely drain out the toilet water tank, release the nuts at bidet body of the bidet hose, and then remove them from main body.

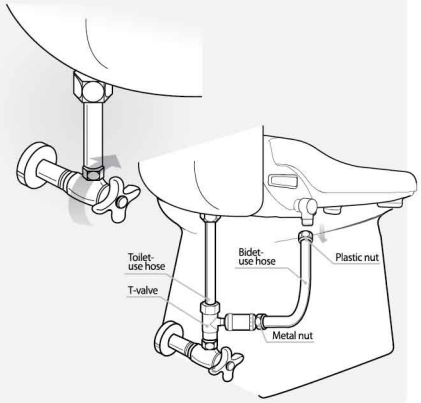

3 Press the button on the side of bidet, completely drain the water out of the of the main body. While keep on pressing the button, pull the main body forward, and then remove it from the toilet.

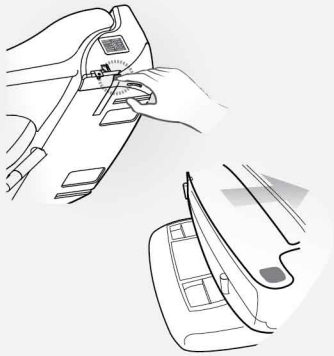

4 Release the nuts, and then remove the brackets from the toilet.

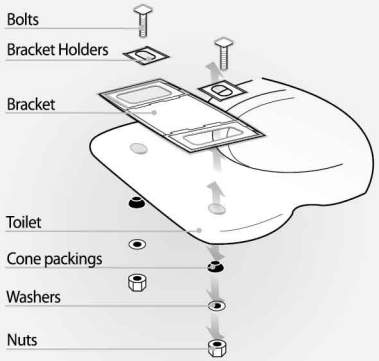

5 Remove bidet hose, toilet-use hose and T-valve.

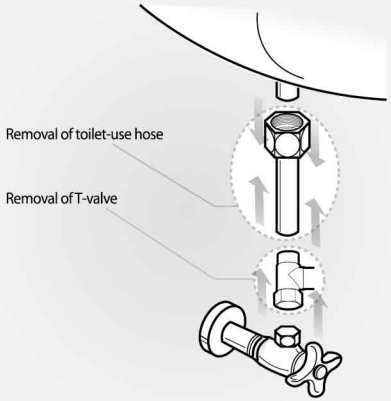

6 Connect the water feed pipe that was removed when the bidet was installed.

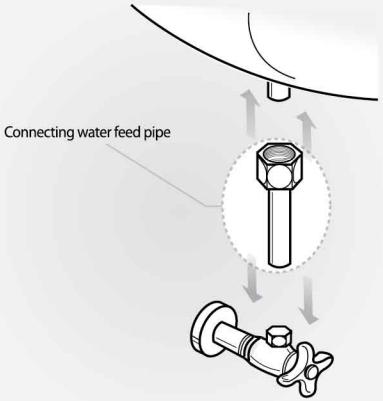

7 Open the water feed valve by turning it anti-clockwise. Be sure of no leakage around the water feed connection.

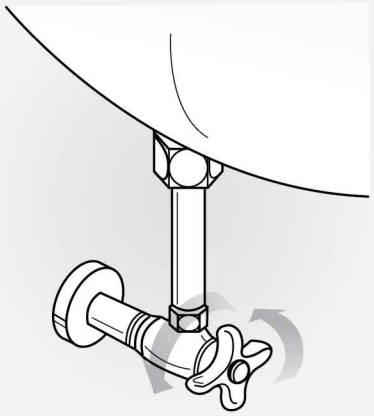

8 Attach to the toilet the seat and cover that were removed when the bidet was installed.

07.How to Use the Product

Basic Operation Method

1 Sit on the toilet seat.

- Deodorization function starts automatically.
- When sitting on the toilet seat, be seated so the user sensor to be occupied. (Otherwise, it may not normally operate due to detection problem)

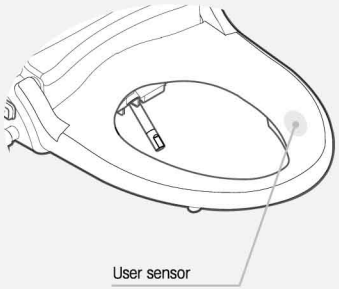

2 Press WASH, BIDET, ENEMA WASH buttons.

- Selected function can be used as desired. (When selecting Enema Wash function, MASSAGE function cannot be used.) (When selecting Child function, Enema Wash function may not operate)
- dib's specialized water spray in Enema Wash function enters into the rectum, and then help relieve constipation and fecal stasis.

3 Press the DRY Button.

- Hot air indicator lamp will lights on. (5 levels available)
- Selected function may be used for three (3) minutes.
- Drying effect will be improved if you wipe the moisture lightly before operating the drying function.

Dry

4 Press the STOP Button.

- Selected functions stop.
- Press "STOP" on the side control panel for 3 seconds to turn off the unit.

Stop

5 MASSAGE Wash

- When pressing the MASSAGE button during the operation of WASH and BIDET, nozzle location will be changed back and forth to wash the wider range.
- When pressing the CHILD button during the operation of MASSAGE, the moving distance can be adjusted within 5 steps.
- MASSAGE function will not operate during the operation of ENEMA WASH.

Massage

6 PULSE Wash

- When the pressing PULSE button during the operation of WASH, BIDET and ENEMA WASH, water pressure will repeat HIGH/LOW level for smooth pulsating wash.

Pulse

7 Water Pressure Control

- Pressing HIGH/LOW button enables the control of water pressure.
- When any foreign material blocks the water pipe filter, it may cause the low water pressure. Regularly check it for its stable use.

Power ctrl

8 Nozzle Position Control

- During the operation of WASH, BIDET and ENEMA WASH, Nozzle position can be controlled by pressing FR/BK.

Position ctrl

1. After enema wash, eliminate the water from your rectum completely.
2. If the concentrated water stream is not pointing at the center of posterior, it may bring some pain or water splashes abnormally.
3. If the anal disease patient uses enema function, it may bring some pain or bleeding for the first several times.
4. Excessive use of enema wash may aggravate constipation.

07.How to Use the Product

Basic Operation Method

9 CHILD Function

- When used by a child, press the CHILD button first (CHILD function lamp behind the operation panel will light on), use the WASH and BIDET function, and then nozzle will move forward and the water pressure will be weakened.
- Nozzle position and water pressure can be adjusted within 5 steps as desired.
- When selecting CHILD function,control range of seat temperature will be dropped to the room temperature, 93°F/96°F/100°F
- Enema Wash function will not operate during the operation of CHILD function.

10 Seat Temperature Control

- When pressing the SEAT TEMP. CONTROL button, the temperature of seat can be controlled within the range of room temperature, 93°F/100°F/107°F
- If the seat temperature reaches 93°F or more, the seat temperature indicator turns in RED. If not(under 91°F), it remains in BLUE.

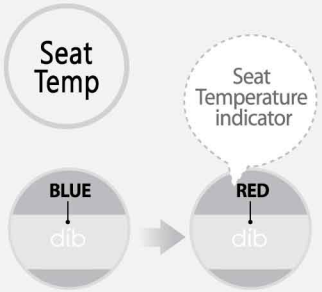

11 Water temperature control

- The temperature of water can be controlled to the desired level by pressing Water Temp button.
- Room temp – Low – Middle - High

12 Energy saving modes

- Automatic energy save mode
  - This mode will be activated by pressing the Energy Saving button until yellow LED lamp lights on.
  - Seat will be kept at 32℃.
  - In case of seat temp. is off, seat temp. will remain at off.
- Learning energy save mode
  - This mode will be activated by pressing the Energy Saving button until green LED lights on.
  - Seat temperature will be kept at 32℃. when it is not occupied, and raise the temperature back to preset level according to memorized time of use.
  - It may take 5 ~ 7 days to let the unit memorize the usage pattern.
- Release energy save mode
  - Press the Energy Saving button until LED is off to release the energy save modes.
- This unit adopts the instant heating technology for water heating and does not consume the energy for water heating when it is in stand by mode.

13 Deodorizing function

- When sitting on the seat, automatically the deodorizing function starts.
- Speed of deodorizing fan can be controlled. (refer to the User setting facilities, P.22)
- After the usage of bidet, the deodorizing function will operate for one (1) minute.

14 Low temperature burn protection

- To reduce the chance of low temperature burns, the seat has a seat heater auto adjustment function which turns to low temperature (32℃) when someone sits on the seat for more than 15 minutes consecutively.

15 User Preset

- Initial nozzle position, water pressure, dry/water/seat temperature can bepreset and stored for 4 users.

 # Presetting

1) Adjust nozzle position, water pressure, dry/water/seat temperature for your comport.

2) Press "User preset" for 3 seconds, and numbers 1,2,3,4 will blink. (occupied number(s) will not blink)

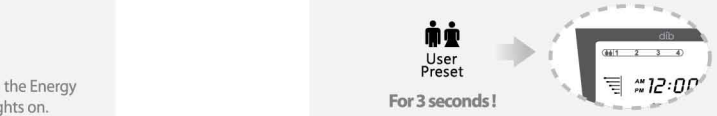

3) Each Wash /Bidet/Enema/Dry replaces 1/2/3/4 in User preset mode. Press the number for storing the memory (previous memory will be deleted if new memory stored)

4) Press "User Preset" again to store the memory and numbers and icon of user preset will be disappeared.

 # Using User preset

1) To use User Preset Function, press "User prest" and one of numbers consecutively. All settings will be set as it is stored before.

Press the number to call up the memory

2) After calling up the preset, use funtion(s) (Wash, Bidet, Enema, Dry).
3) To release the user preset function, press "User Preset" again.

Operation

08. User Setting Facilities

8-1. User setting with the remote control

● : Seat Switch 'Off' Status ○ : Seat Switch 'On' Status ◐ : Regardless of On/Off

No	Function	Seat Status	Switch Operation	Description	Initial Status
1	Time setting	◐	Stop / Child Press both "STOP" and "CHIILD" button for 3 seconds	AM PM 12:00 If the numbers blink, time setting is available.	AM 12:00
			▲ ⋮ ▼ POSITION CONTROL Change the mode (hour/minute) by pressing "Nozzle position"		
			+ ⋮ − POWER CONTROL Set the time by pressing "Power control"		
	Release the time setting mode		Stop Press "STOP" to finish the time setting		
2	Selecting the speed of deodorizing fan	◐	Stop / Energy saving While pressing the "STOP", press "ENERGY SAVING" for longer than 3 sec.	Stop + Energy saving: Fan speed (Occupied / Unoccupied) — Display on LCD Default: High / High 3 sec: Off / Off 5sec: Low / Low 7 sec: Low / High 9 sec: High / High	High speed in occupied mode. High speed in unoccupied mode.
3	Remote control ID setting	◐	Massage Press "MASSAGE" for longer than 5 sec.	1d 00 ID can be chosen from 00 ~ 99. If main unit is powered off and on again, ID of main unit will be reset as 00. Before use, synchronize the IDs of main unit and remote control. Default ID is 00.	1d 00
			+ ⋮ − Power ctrl / Stop Change the ID by pressing "+" or "-", and press "STOP" to set the ID		
	Remote control ID change	◐	If batteries of remote control changed, set the ID again as it is shown above.	If batteries changed or ID changed (not 00), plug out the main unit for longer than 3 sec and plug in again. Main unit ID will be synchronized with ID of remote control automatically.	

Tip. If washing time is set at 3 minutes or longer, sitz bathing will be possible.

8-2. Extra functions with side contol panel

● : Seat Switch 'Off' Status ○ : Seat Switch 'On' Status ◐ : Regardless of On/Off

No	Function	Seat Status	Switch Operation	Description
1	Nozzle cleaning	●	Press "WASH" for longer than 3 sec.	Nozzle will move forward for cleaning.
			Press "STOP"	Nozzle will retract and clean itself.
2	Power off	●	Press "STOP" for 3 sec.	Press one of "STOP", "WASH", or "BIDET" to power on.
3	Initialization	●	Press "STOP" for longer than 5 sec.	All setting will be initialized.
4	Chime sound cancel	●	Press BIDET button for 3 sec.	To on/off the chime sound.

Operation

09.Maintenance & Cleaning

Cleaning of Water pipe filter

1. Close the water feed valve by turning it clockwise.
2. Disconnect the water supply hose. Take the screen filter out and clean it with soft brush. (e.g. toothbrush)
3. After cleaning, place it back. Then connect the water supply hose.
4. Open the water feed valve by turning it anti-clockwise.

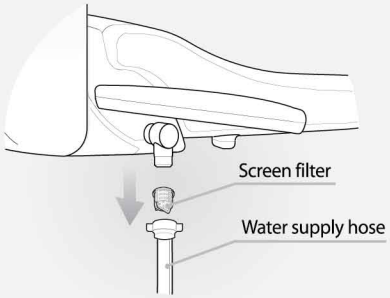

Cleaning of Nozzle

1. Press "WASH" (on the unit's side control panel) for longer than 3 seconds, and then the nozzle will move forward and stop (for 2 minutes).
2. Clean the nozzle with an unused toothbrush, etc., and Press "STOP" (on the unit's side control panel) then it will return to the original place for self cleaning.

Cleaning of Bidet Body

1. Exterior surface of bidet is made of plastic material, which may be damaged by scrubber, chemicals, etc.
2. Wipe the surface with a soft cloth wet and squeezed completely. Don't spray water directly onto the surface with the bath-use shower device.
3. Clean the body after removing the power plug from the outlet. Be sure no water splash to the power plug or outlet.
4. Don't touch the power outlet with wet hand. Risk of electric shock.

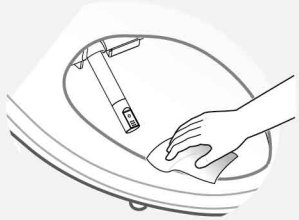

Drainage of Hot Water Tank

1. Remove the power plug from the outlet.
2. Close the water feed valve by turning it anti-clockwise.
3. Press the button on the side of main body.

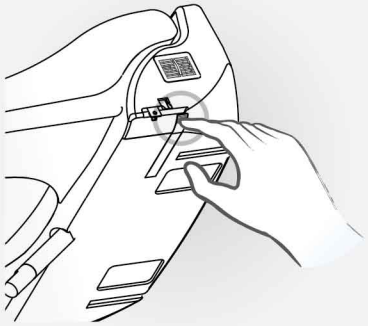

Maintenance during winter season

1. Insert the power plug into the outlet and be sure if the power is supplied.
2. When it is not used for a long time, drain the water from the water tank

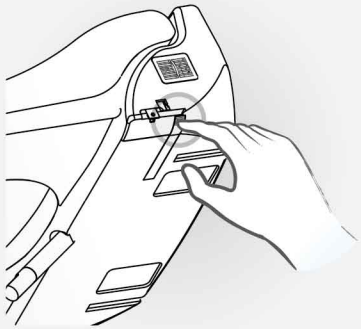

Do not throw away

We are committed to protection the environment.
Please help us by disposing of this product in a responsible way when it reaches the end of its service life, to prevent certain substances contained in electric and electronic products from harming public health or the environment. The symbol means that the products must not be thrown away with other household waste: at the end of its service life, it must be taken at no charge to you to the waste-collection centers provided for the purpose by the authorities in your country.
Or to be distributor from whom you purchase a new product that is equivalent to or that performs the same functions as this product. This latter option may not be available in some countries.

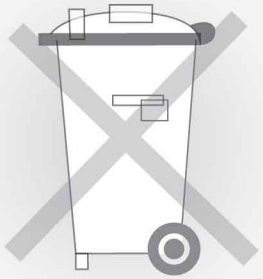

10. Before requesting repair

※ Please check the following points before requesting the repair of the product.

Signs to occur	Matters to be checked
Completely out of operation	• Check if the power plug is not connected. • Check the power failure.
Water does not spray out	• Check if the water supply is suspended. • Check if water feed valve is locked • Check if nozzle is blocked by foreign material • Check if connection hose is bent
Water pressure is low	• Check if water pipe filter is blocked by foreign material. • Check if the water pressure is set at too low level
Water is not warm enough	• Check if its temperature is set at 'Off' or 'Low'.
Seat is not warm enough	• Check if its temperature is set at 'Off' or 'Low'
Enema Wash is not operated	• Check if it is set at CHILD mode.

Self-Diagnosis Table

※ When any abnormal phenomenon occurs, please refer to the following table, and inform the exact status at the time of requesting A/S service. It may relieve our countermeasure.

No	Self-Diagnosis Phenomenon	Way of Indication
1	Pump motor disconnected or not inserted	WASH, BIDET, ENEMA WASH are our of operation
2	Pump motor short-circuited	
3	Deodorizing motor: Check the cycle of rotation at low speed	Buzzer sounds. Abnormal condition is differently indicated by symptoms
4	Stoppage of motor due to the over-current of deodorization motor	
5	Heat stops in case of low speed rotation of drying motor	
6	Heater and drying motor simultaneously stop in case of the over-current of drying motor.	

11. Product Specifications

Item			DIB-1500R
Rated Voltage			AC 120V, 60Hz
Max. Consumption Power			1270W
Power Cord Length			4ft.
Water Feed Method			Directly Connected to Water Pipe
Water Pressure			9.9 ~ 106.6psi
Wash	Feeding Volume	Wash	0.16dmfh
		Bidet	0.16dmfh
		Enema Wash	0.16dmfh
	Water Pressure Control		5-Step Control
	Temp. Control		Room Temp. ~ 100℉
	Heat Capa.		1200W
	Safety Device		Temp. Fuse, Thermo Switch
Heated Seat	Temp. Control		Room Temp. ~ 107℉
	Heater Capa.		55W
	Safety Device		Temp. Fuse
Dry	Temp. Control		Room Temp. ~ 122℉
	Heater Capa.		250W
	Safety Device		Temp. Fuse, Bi-metal
Deodorization			Catalytic Deodorization
Product Dimension ※inch(mm)	Elongated		15.9"(406) X 20.8"(528) X 5.7"(145)
	Round		15.9"(406) X 19.5"(496) X 5.7"(145)
	Small		15.9"(406) X 18.5"(470) X 5.7"(145)
Product Weight /Gross weight ※lb(kg)	Elongated	10.6(4.8) / 17.3(7.8)	10.4(4.7) / 16.9(7.7) / 9.9(4.5) / 16.5(7.5)
	Round	10.5(4.7) / 17.1(7.6)	10.3(4.6) / 16.7(7.5) / 9.8(4.4) / 16.3(7.3)
	Small	10.4(4.6) / 16.9(7.4)	10.2(4.5) / 16.5(7.3) / 9.7(4.3) / 16.1 (7.1)

12.Comparison Chart

	Division	DIB-1500R
Wash/Dry Function	Wash	●
	Bidet	●
	Enema Wash	●
	Dry	●
	Deodorization	●
	Bubble Wash	●
	Continuous Warm Water Supply	●
Convenient /Comfort Function	Automatic Energy Saving	●
	Learning Energy Saving	●
	Massage	●
	Pulse	●
	Remote control unit	●
	Warm Seat	●
	Soft closing lid/seat	●
	Low temperature burn protection	●
	Child mode	●

▪ Dimension diagrams inch (mm)

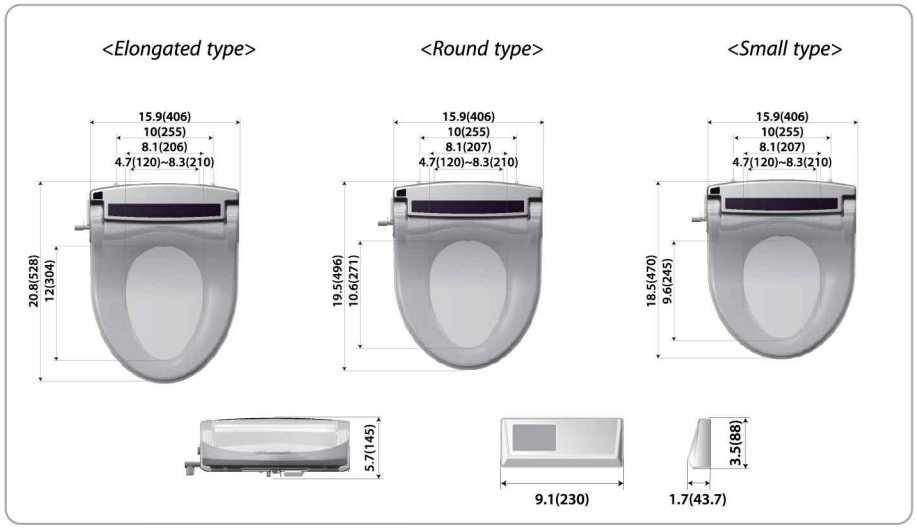

13.Memo

13.Memo

14.WARRANTY INFORMATION

- WARRANTY -

1. We hereby guarantee the product as follow in accordance with the regulation of consumer damage compensation.
2. In case of failure of the product, please inform the distributor where you purchased the product.
3. Product warranty will be effective for 5 years since the product has been discontinued.

Product Name			Warranty Period
Model Name			One (1) year since the date purchased
Date Purchased			
SER. No.			
Customer's Address		Name	
		Tel.No	
Distributor's Address		Name	
		Tel.No.	

Regarding Product Warranty Regulation...

1. We will repair the product at free of charge in case it was failed under the normal operating condition in accordance with the user's guide during the warranty period.
2. Although it is within the warranty period, we will charge the repair service fee etc. (repair + product + travel expense) if it falls under the following cases.

Voiding warranty

1. Defects occurred from the user's careless handling
2. Defects occurred from the usage with incorrect power voltage (E.g., 220V was used to the 110V product.)
3. Defects occurred from the improper repair done by the person other than our service engineer.
4. Defects occurred from Force Majeure (fire, salt, flood, etc.)
5. Failure or damage due to the drop, etc. (user's mis-handling) during the operation after installed
6. Defect occurred from the interior modification at user's discretion
7. In case the life cycle of the part expired

Mail, email or fax the warranty form to :
YOUR LOCAL DEALER FIRST where you bought this appliance

If your dealer is unable to assist you

LS Daewon LIVING SOLUTION
94, Robot land-ro 249beon-gil, Seo-gu, Incheon, Korea
www.lsdaewon.co.kr